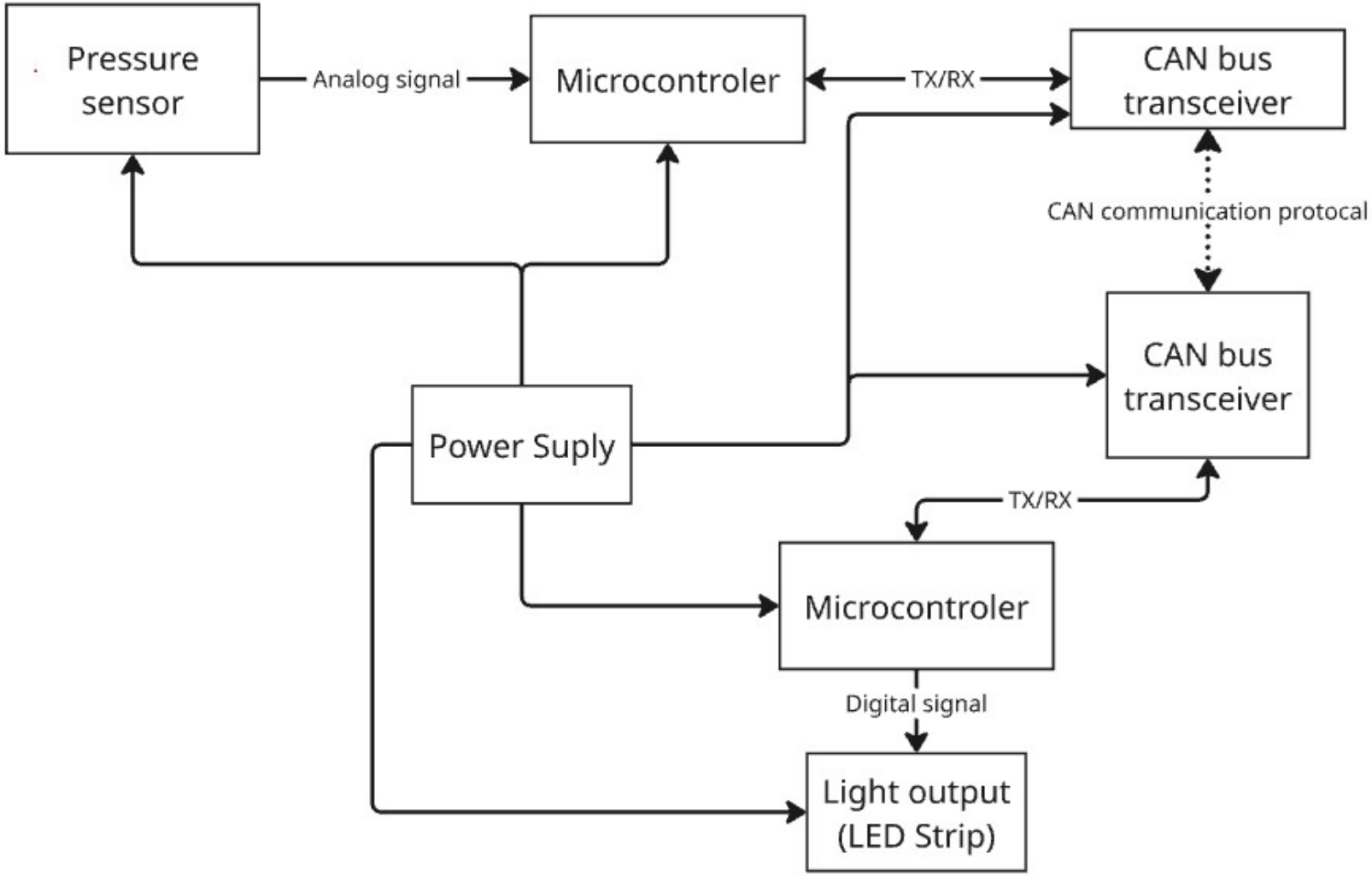
Pressure sensor
Analog signal
Microcontroler
TX/RX
CAN bus transceiver
CAN communication protocal
CAN bus transceiver
Power Suply
TX/RX
Microcontroler
Digital signal
Light output (LED Strip)